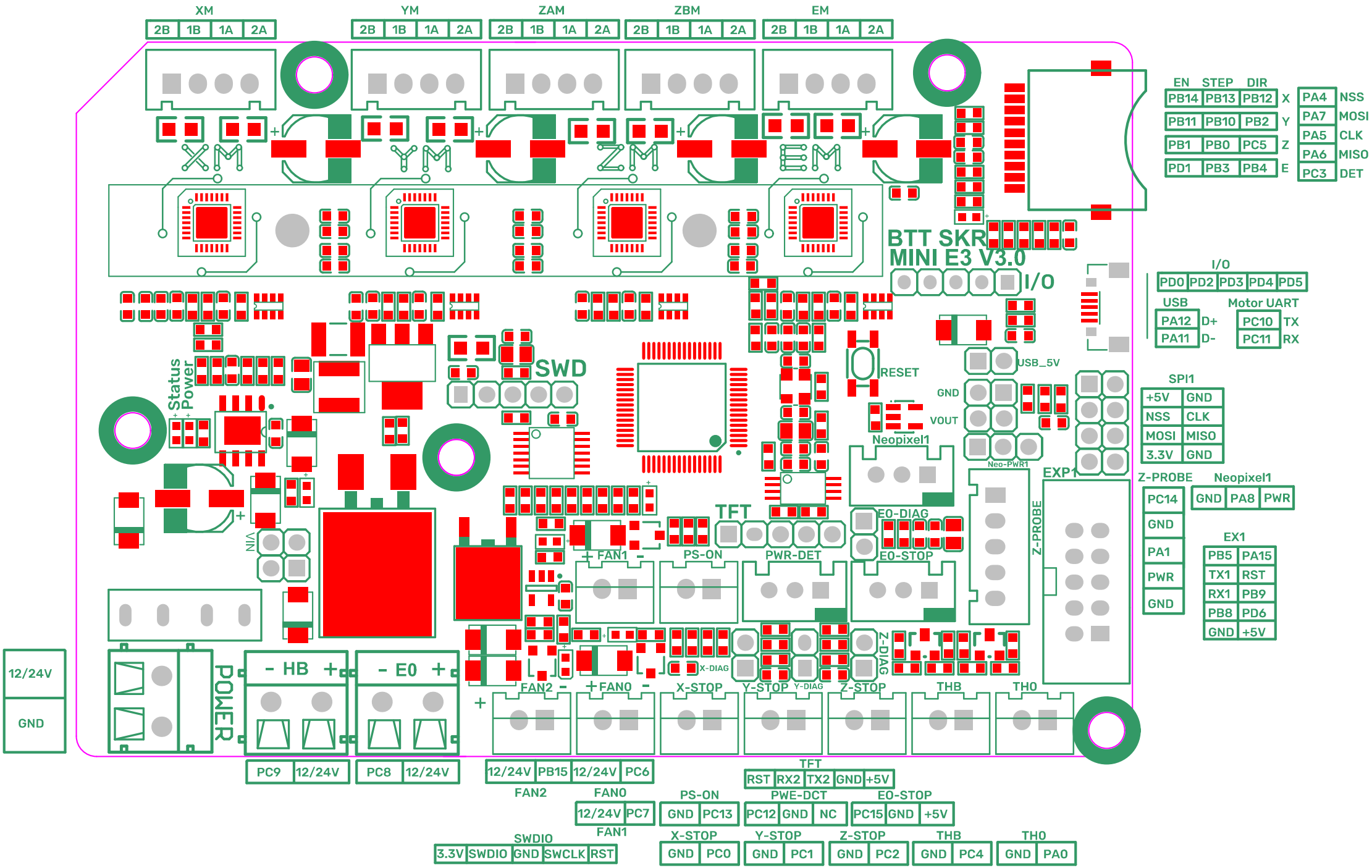
XM
2B 1B 1A 2A
YM
2B 1B 1A 2A
ZAM
2B 1B 1A 2A
ZBM
2B 1B 1A 2A
EM
2B 1B 1A 2A
XM
YM
ZM
EM
BTT SKR
MINI E3 V3.0
I/O
EN STEP DIR
PB14 PB13 PB12 X
PB11 PB10 PB2 Y
PB1 PB0 PC5 Z
PD1 PB3 PB4 E
PA4 NSS
PA7 MOSI
PA5 CLK
PA6 MISO
PC3 DET
I/O
PD0 PD2 PD3 PD4 PD5
USB
PA12 D+
PA11 D-
Motor UART
PC10 TX
PC11 RX
SPI1
+5V GND
NSS CLK
MOSI MISO
3.3V GND
Z-PROBE
PC14
GND
PA1
PWR
GND
Neopixel1
GND PA8 PWR
EX1
PB5 PA15
TX1 RST
RX1 PB9
PB8 PD6
GND +5V
Status
Power
SWD
RESET
USB_5V
GND
VOUT
Neopixel1
Neo-PWR1
EXP1
Z-PROBE
TFT
E0-DIAG
E0-STOP
VIN
FAN1
PS-ON
PWR-DET
X-DIAG
Z-DIAG
Y-DIAG
FAN2
FAN0
X-STOP
Y-STOP
Z-STOP
THB
TH0
12/24V
GND
POWER
- HB +
- E0 +
PC9 12/24V
PC8 12/24V
12/24V PB15 12/24V PC6
FAN2
FAN0
12/24V PC7
FAN1
TFT
RST RX2 TX2 GND +5V
PS-ON
GND PC13
PWE-DCT
PC12 GND NC
E0-STOP
PC15 GND +5V
SWDIO
3.3V SWDIO GND SWCLK RST
X-STOP
GND PC0
Y-STOP
GND PC1
Z-STOP
GND PC2
THB
GND PC4
TH0
GND PA0